NOTE DELETE SS-802SM (1) ADD SS-801SM (1)
PER ECO 2949
CHANGE PART # TT-0083 TO TT-0083-B
PER ECO 2964
PRIMARY PART # SS-210SM, ALTERNATE PART # SS-0300
PER ECO 2987

CORD	REV	REVISION RECORD	AUTHORITY	DATE	CORD	REV	REVISION RECORD	AUTHORITY	DATE
	F	ECO 2822	W.C.	10-92		A	ECO 2635	D.F.	6-92
	G	ECO 2949	W.C.	12-92		B	ECO 2656	D.F.	6-92
	H	ECO 2964	W.C.	12-92		C	ECO 2678	D.F.	6-92
	I	ECO 2987	WC	12-92		D	ECO 2696	D.F.	6-92
						E	ECO 2785	W.C.	10-92

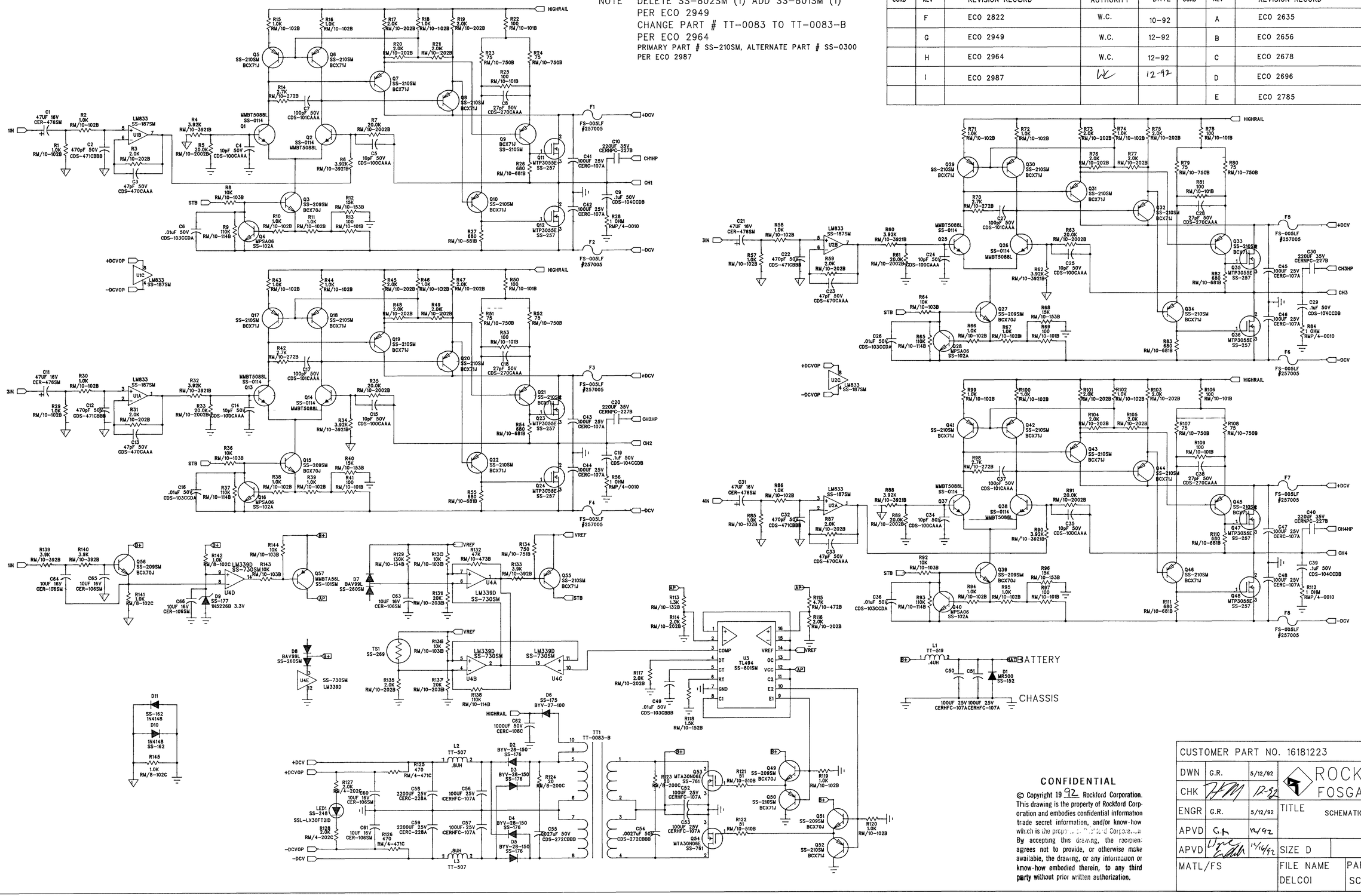

CONFIDENTIAL

© Copyright 19 92 Rockford Corporation. This drawing is the property of Rockford Corporation and embodies confidential information trade secret information, and/or know-how which is the property of Rockford Corporation. By accepting this drawing, the recipient agrees not to provide, or otherwise make available, the drawing, or any information or know-how embodied therein, to any third party without prior written authorization.

CUSTOMER PART NO. 16181223			
DWN G.R.	5/12/92	ROCKFORD FOSGATE CORPORATION DIVISION TEMPE AZ	
CHK	12-92		
ENGR G.R.	5/12/92	TITLE SCHEMATIC SURFACE MAOUNT 80 AUDYSSEY	
APVD G.R.	12/92		
APVD	12/16/92	SIZE D	SHEET 1 OF 1
MATL/FS		FILE NAME DELCOI	PART NO. SCH-0088 REV I